DURO-LAST® SCUPPERS

DATA SHEET

Description:
Duro-Last® Scuppers are designed to be used on rectangular outlets extending through walls or raised roof edges. The scuppers are made with Duro-Last specially formulated roofing membrane and in many cases incorporate Duro-Last Vinyl-Coated Metal. The combination of reinforced membrane and prefabrication ensures a long lasting, watertight flashing. They are available in white, tan, gray and dark gray colors.

Duro-Last Scuppers are prefabricated using Duro-Last Outside Corners to eliminate field welds in the critical corner areas.

Custom configurations, including incorporating the scupper with a collector box, are available upon request.

Duro-Last Scuppers are prefabricated in several styles as illustrated and described below. In each description the appropriate detail drawings are referenced for installation instructions.

Drawing A

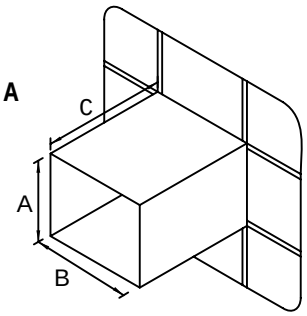

A. Single Skirt

- This style utilizes a single skirt of Duro-Last membrane for hot-air welding to the roof and wall membrane.
- The material extending into the outlet ("C" dimension) may be either Duro-Last membrane or Duro-Last vinyl-clad metal.
- See detail drawing 2041 when the scupper is composed entirely of Duro-Last membrane.
- See detail drawing 2060 when vinyl-clad metal extends through the outlet.

Drawing B

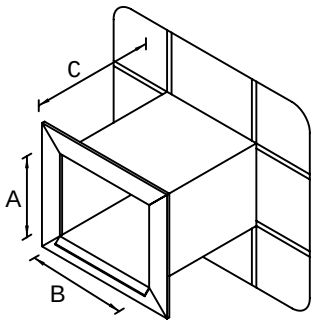

B. Single Skirt with Metal Flange

- This style utilizes a single skirt of Duro-Last membrane for hot-air welding to the roof and wall membrane.
- The material extending through the outlet ("C" dimension) is Duro-Last vinyl-clad metal.
- A flange is incorporated on the outside face to provide for attachment. This flange includes a drip edge and a Kynar coated metal clip is added for decorative purpose.
- See detail drawing 2060.

Drawing C

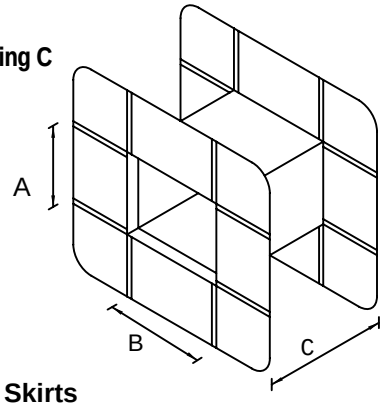

C. Two Skirts

- This style utilizes two skirts of Duro-Last membrane. One skirt is hot-air welded to the roof and wall membrane. The second skirt is terminated against the outside wall.
- The material extending through the outlet ("C" dimension) may be either Duro-Last membrane or Duro-Last vinyl-clad metal.
- See detail drawing 2040 when the scupper is composed entirely of Duro-Last membrane.
- See detail drawing 2060 when vinyl-clad metal is used to extend through the outlet.

Note:

- Contact Duro-Last, Inc. for sizes available.

Duro-Last: The Proven Performer®

"Duro-Last" and "The World's Best Roof" are registered marks owned by Duro-Last , Inc. 2009